Sub-Saharan Report [Business Plus]

These reports are by Mr. Ryota Kikkawa, an expatriate employee working in Johannesburg with a view across the region.

Business Plus

With a growing population, abundant natural resources, and enormous infrastructure and industrial development potential, Africa, particularly sub-Saharan Africa, has been called the "Continent of Hope". In Marubeni's mid-term management plan, "Global Challenge 2018", sub-Saharan Africa has been cited as an important region to actively pursue opportunities to lay the groundwork for future business.

The Marubeni Research Institute has modified the "Sub-Saharan Report", which basically presented an overview of sub-Saharan countries, to focus on the latest business trends and prominent business models in the region, including Marubeni's own businesses. This revised version is called "Sub-Saharan Report [Business Plus]".

Cultivating New Business Based on the Spread of EVs - Marubeni's Graphite Business in Mozambique

July 27, 2018

The battle for secondary (rechargeable) lithium-ion battery (LiB) materials has begun on the back of demand for electric vehicles (EVs) (note 1). As graphite is one of those indispensable materials for the lithium-ion batteries that power EVs, I would like to introduce Marubeni's graphite business in Mozambique this time.

Lithium-Ion Battery (LiB) Mechanics

First, I want to look at how LiBs, which are attracting attention from the rise of EVs, work. LiBs are made up of such elements and parts as cathode (positive electrodes) and anode (negative electrodes) materials, electrolyte, separators, binders and so on. Unlike first generation lithium batteries, LiBs can be recharged and used repeatedly, and compared to nickel-cadmium rechargeable batteries in the past their capacity is much larger. Today, lithium-ion batteries are used in a range of electronic devices including smartphones and personal computers because there is no decrease in the maximum charging capacity due to repeated charging and discharging.

Charging (left) and discharging (right) are carried out by moving lithium ions between the cathodes (positive electrodes) and anodes (negative electrodes) in the electrolyte solution.

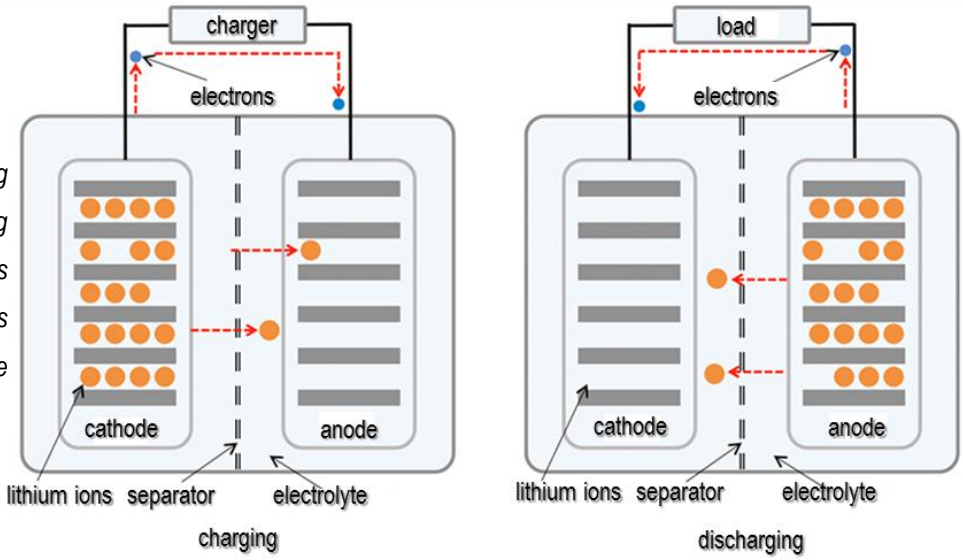

Source: Created from the HP of the Battery Association of Japan

One representative cathode material for lithium-ion batteries is formed by mixing lithium oxide with cobalt to form lithium cobalt oxide. Anode materials for LIBs are mainly carbon compounds of which graphite is the mostly widely used. Due to

the rise in demand for LiBs, demand for materials like lithium and cobalt are expected to grow by 30 times by the year 2030 (according to Bloomberg New Energy Finance).

What about graphite?

Graphite is a carbon-based material which has various characteristics. One of its main applications has been for electrodes in electric arc furnaces used in steel production and in refractory products due to its heat resistant properties. It is also used in lubricants for auto parts and in brake pads as well as in the lead for pencils (due to its soft properties). Moreover, as it is also conductive (conductor of electricity) it can be used for battery materials. In terms of the type of graphite used as a material for LiBs it is called flake graphite (note 2). Among all the uses for flake graphite approximately 23% goes to batteries including LiBs and demand for flake graphite in this field is expected to further grow going forward.

Graph 1: Natural Graphite by Application (%)

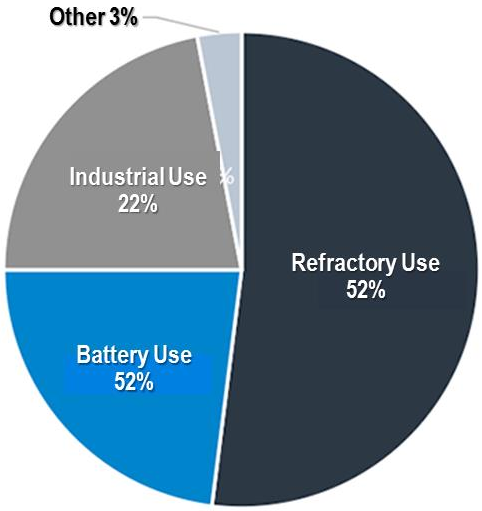

Source: Roskill

With regard to graphite production volume, China overwhelmingly led the world in 2017 with a 65% share (780 thousand tons per annum) of the world's total production followed by India (150 thousand tons), Brazil (95 thousand and Canada (30 thousand tons). As far as proven reserves of graphite go Turkey has the most (90 million tons) with Brazil (70 million tons) and China (55 million tons) next. Mozambique, Tanzania and Madagascar in East Africa also have abundant reserves particularly of the highly pure flake type of graphite and it is likely these reserves will increase with further exploration.

Graph 2: World's Proven Graphite Reserves

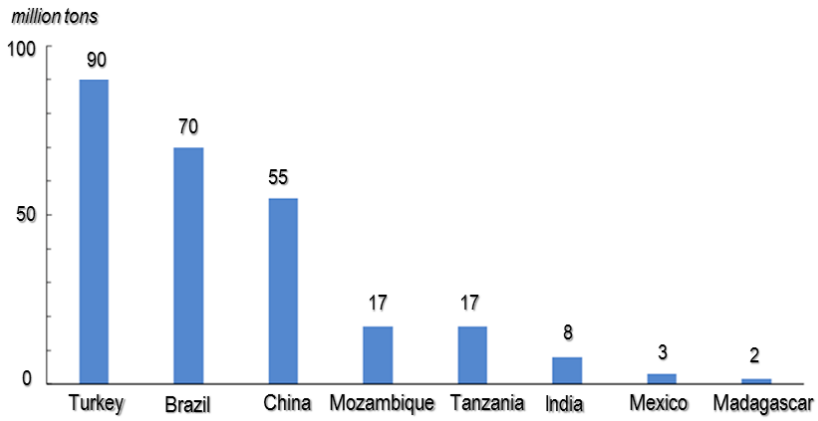

Source: U.S. Geological Survey

LiB anode material demand, meaning flake graphite in this case, is expected to jump from 150 thousand tons (natural graphite equivalent) in 2017 to 800 thousand tons by 2025. Except for a one time rise in graphite prices in 2012, graphite prices fell from 2010, when China temporarily shut down a graphite mine, until 2015. However, since 2015 prices have solidified on the back of increased demand for lithium-ion batteries.

Marubeni's Graphite Business

Given the growing demand for batteries, natural resource companies, especially Australian ones, have been pushing forward on numerous graphite exploration and development projects in Africa. Graphite deposits are highly concentrated in the border area between Mozambique and Tanzania. In particular, there are large deposits of high grade graphite in the Balama area of Cabo Delgado Province in northeastern Mozambique. So, many of these companies are now in the process of acquiring mining rights and embarking on exploration and development of the graphite deposits in this area.

Balama's Location

Major Graphite Projects in Africa

Project	Company	Resources Amount (ore basis, million tons)
Balama-Nicanda Hill (Mozambique)	Triton Minerals (Australia) other	1,458
Balama-Syrah (Mozambique)	Syrah Resources (Australia)	1,191
Nachingwea-Namangale (Tanzania)	Volt Resources (Australia)	446
Mahenge (Tanzania)	Black Rock Mining (Australia)	163
Molo (Madagascar)	Energizer Resources (Canada)	141

Following a few years of preliminary work, Marubeni Corporation signed an exclusive off-take agreement with the Australian company Syrah Resources Limited for the exclusive sale of spherical (natural) graphite, a by-product of natural graphite, specifically flake graphite, from their major graphite project in Mozambique to Japan and Korea (press release).

Within the project area, in addition to the actual mining area (back of the picture), there are facilities for each process, such as crushing/grinding, storage, flotation, washing, polishing, drying, classifying, bagging and warehousing, along with laboratories for analysis.

Picture 1: A view of Syrah Resource's Balama graphite project (from Syrah Resources)

In 2013, Syrah Resources obtained the rights to a mining block in Balama in Mozambique with production starting in November of 2017. 160 thousand tons of graphite has already been exported from the mine. The Balama mine boasts

estimated graphite reserves of 117.3 million tons making it the world's largest graphite mine. The mine is making a great contribution to Mozambique's industry and in April of this year the president of Mozambique participated in the mine's official opening ceremony. Syrah Resources expects to gradually expand its production volume with the aim of reaching 300,000 tons of graphite per year sometime in 2019. Currently almost 100% of the spherical graphite used as anode material for lithium-ion batteries is produced in China. However, due to the environmental deterioration caused by wastewater from graphite mines in China the authorities have started to close some of those mines. And, customers who have wanted to diversify their supply sources due to their overriding dependence on Chinese graphite are starting to focus their sights on African graphite.

It is projected that 30 tons of flake graphite will be exported annually from the Balama mine to Japan. Marubeni signed an off-tale agreement for 50 thousand tons per year of spherical graphite from Mozambique, as Marubeni anticipates selling not only to refractory product manufactures but also to anode (negative electrode) makers as the demand for LiBs, and along with them spherical graphite as a material for anodes, is expected to continue to grow (note 3).

Picture 2: President Nyusi of Mozambique (center) at the official opening of the Balama mine (picture from Syrah Resources)

Marubeni's Battery Business Outlook (Keiichi Tanaka, Specialty Chemicals Department-II, Inorganic Mineral Resources Section)

National governments have been launching electric vehicle-related policies one after the other and every major auto maker has come out with plans to convert to EVs, so the trend toward converting to EVs seems to be getting ever stronger. Likewise, with the ongoing advance of renewable energy, an increase in the demand for energy storage batteries of 6.6 times is foreseen between 2017 and 2030. Marubeni's Specialty Chemicals Department-II sees this as a revolutionary once in 100 year opportunity and as such is looking to foster Syrah Respuorces' graphite business as one of the pillars of Marubeni's battery business. Moreover, over the last 10 years or so we have been following the almost day-to-day advances in LiB technology, assessing market trends and accumulating knowledge through our handling of almost all the parts and materials for LiBs. Utilizing this experience, we aim not only to deepen our materials business, but are also are looking to expand our department's and Marubeni Group's entire battery business at every stage of the supply chain; upstream, midstream and downstream.

Note 1: A secondary battery is a battery that can be used repeatedly by recharging it versus a primary battery which cannot be recharged and becomes depleted.

Note 2: Once flake graphite is crushed and goes through the flotation process it is cut into spherical shapes to be used as material for anodes (negative electrodes) material.

Note 3: 100 thousand tons of flake graphite converted into the equivalent of natural graphite would represent 12% of world natural graphite production.

Mr. Ryota Kikkawa
Johannesburg Branch
Marubeni Corporation

In order for the Marubeni Research Institute to acquire first hand information from the field and contribute to the company's strategy, young Marubeni staff well-versed in economic and industry analysis have been posted to the region.

	Marubeni Research Institute	Telephone: 3282-7687 E-mail: ryan-p@marubeni.com
Address	2-7-1 Nihonbashi, Chuo-ku, Tokyo 103-6060, Nihombashi Tower 21st Floor	
WEB	http://www.marubeni.co.jp/research/index.html	